Lauren Collection
G-2410-C21B
Lauren Widespread Lavatory Faucet

Product Features

- Installs on 8
- Aerated flow rate ?1.2 max gpm
- 1-11/32” hole cutouts (x3)
- Includes pop-up drain assembly with lift rod and overflow
- Optional matching decorative trap G-9973

Code compliance

- CALGreen

Available Finishes
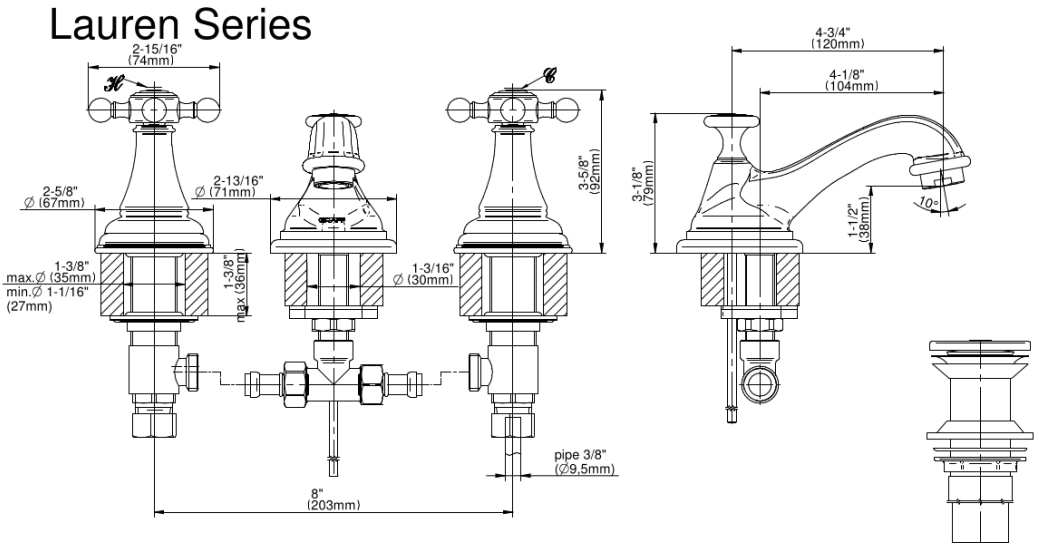
Lauren Collection
G-2410-C21B
Lauren Widespread Lavatory Faucet