Immersion Collection
G-2311-LM31W-T
Immersion Widespread Lavatory Faucet

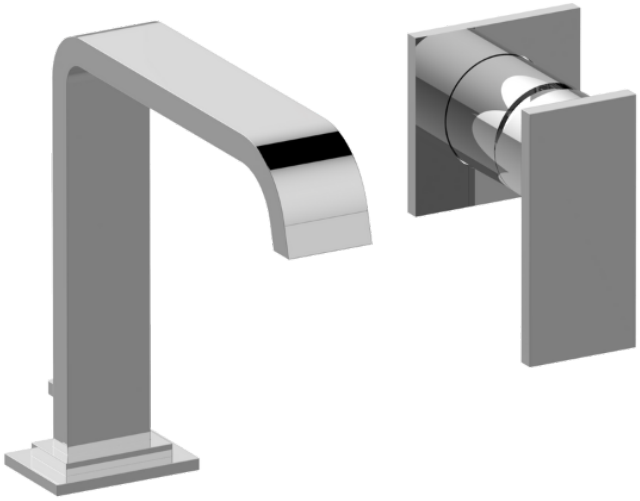

Product Features

- Aerated flow rate ? 1.2 max gpm
- 1” hole cutout for spout
- Includes pop-up drain assembly with lift rod and overflow
- Optional matching decorative trap G-9971
- To complete package, you must order Rough Valve

Code compliance

- ADA
- CALGreen

Available Finishes

IMMERSION Series

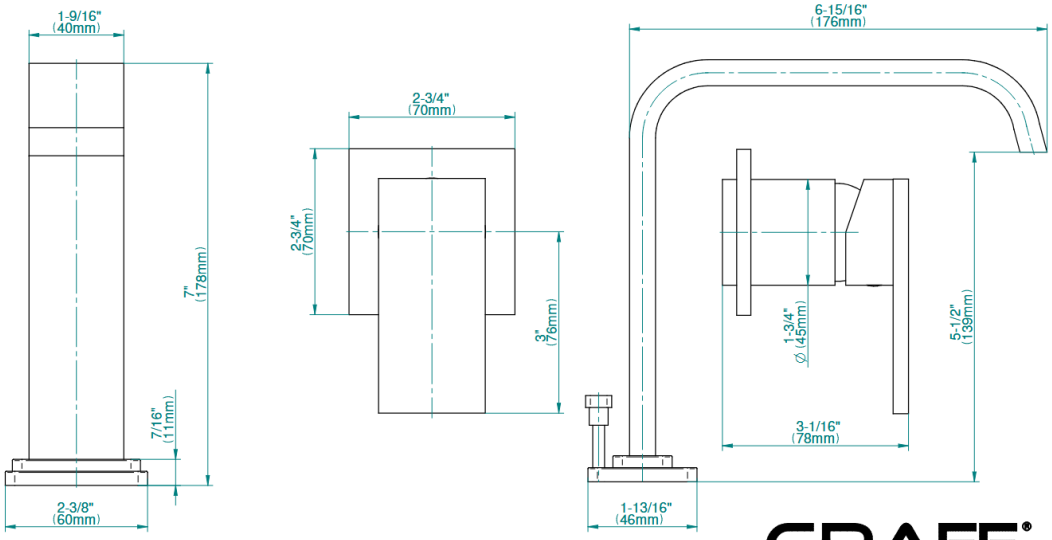

GRAFF®
Art of Bath