Bali Collection
G-2110-LM21B
Bali Widespread Lavatory Faucet

Product Features

- Aerated flow rate ? 1.2 max gpm
- 1 3/8" (x3) hole cutouts
- Includes Pop-up Drain Assembly w/Lift Rod & Overflow
- Optional matching decorative trap G-9973

Code compliance

- ADA
- CALGreen

Available Finishes
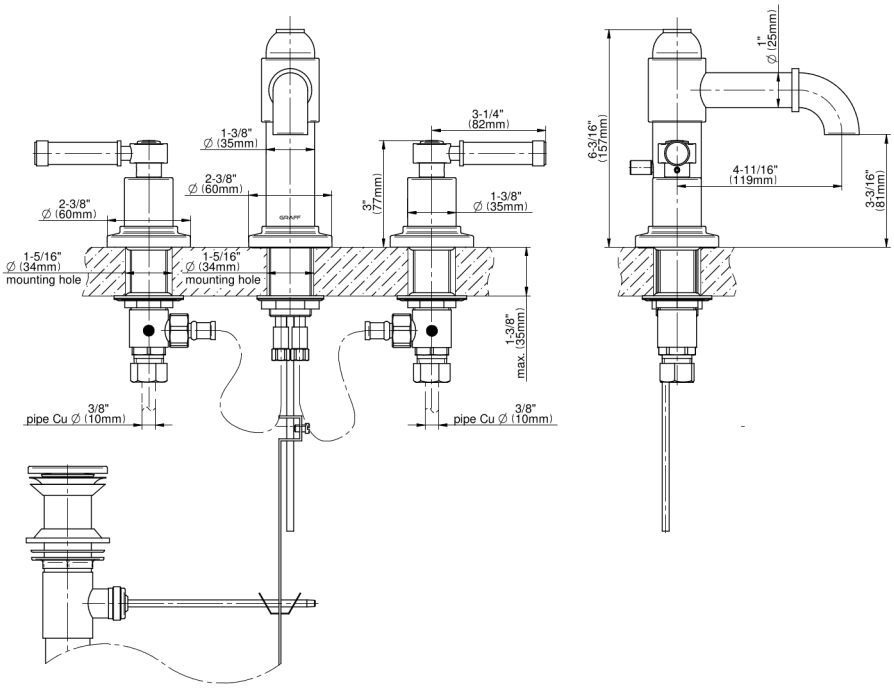
Bali Collection
G-2110-LM21B
Bali Widespread Lavatory Faucet