Bali Collection
G-2101-LM21M
Bali Lavatory Faucet

Product Features

- Single-hole installation
- Aerated flow rate ? 1.2 max gpm
- 1 3/8" hole cutout
- Includes pop-up drain assembly with lift rod and overflow
- Optional matching decorative trap G-9973

Code compliance

- ADA
- CALGreen

Available Finishes
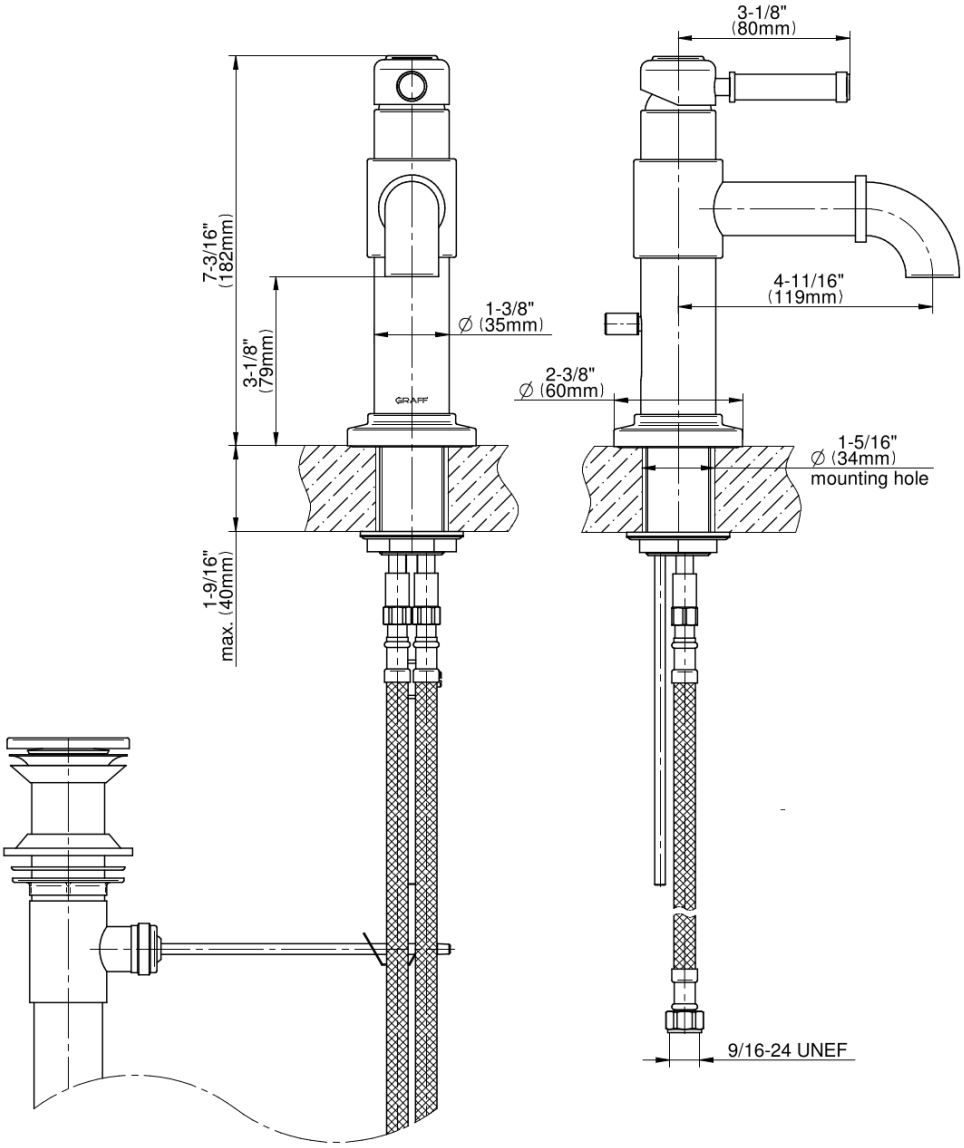
Bali Collection
G-2101-LM21M
Bali Lavatory Faucet