Topaz Collection
G-1953-LM14B
Topaz Roman Tub Set

Product Features

- 1 1/3” hole cutout (x5)
- Aerated flow rate 8 gpm @60 psi
- Handshower flow rate ?1.5 max gpm
- Deck-mounted handshower and diverter set included
- Optional in-line pressure balancing valve

Code compliance

- ADA

Available Finishes
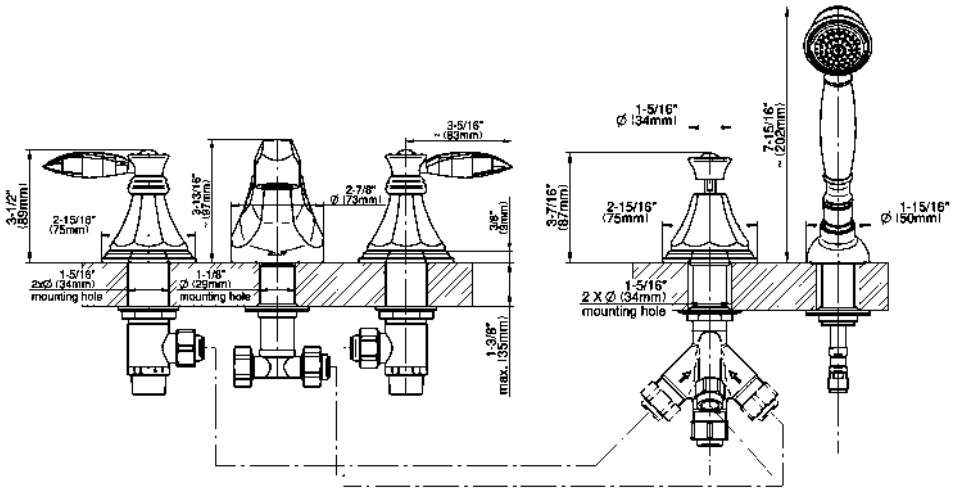
Topaz Collection
G-1953-LM14B
Topaz Roman Tub Set