Topaz Collection
G-1910-C16L
Topaz Widespread Lavatory Faucet

Product Features

- Installs on 8
- Aerated flow rate ?1.2 max gpm
- 1-11/32” hole cutouts (x3)
- 5” spout reach
- Includes push-top umbrella, pop-up drain with overflow
- Optional matching decorative trap G-9973

Code compliance

- ADA
- CALGreen

Available Finishes
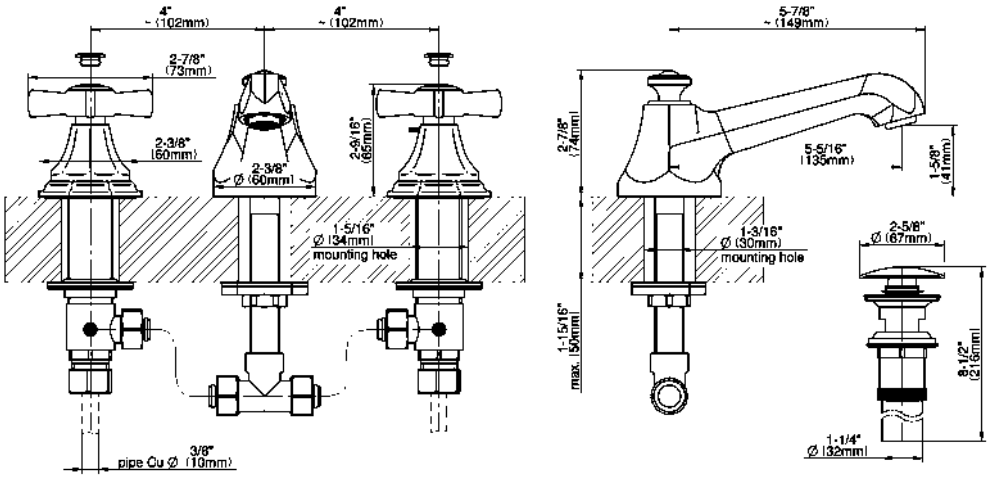
Topaz Collection
G-1910-C16L
Topaz Widespread Lavatory Faucet