Topaz Collection
G-1900-C16L
Topaz Widespread Lavatory Faucet

Product Features

- Installs on 8” centers
- Aerated flow rate ?1.2 max gpm
- 1-11/32” hole cutouts (x3)
- 5” spout reach
- Includes pop-up drain assembly with lift rod and overflow
- Optional matching decorative trap G-9973

Code compliance

- ADA
- CALGreen

Available Finishes

Topaz Collection
G-1900-C16L
Topaz Widespread Lavatory Faucet
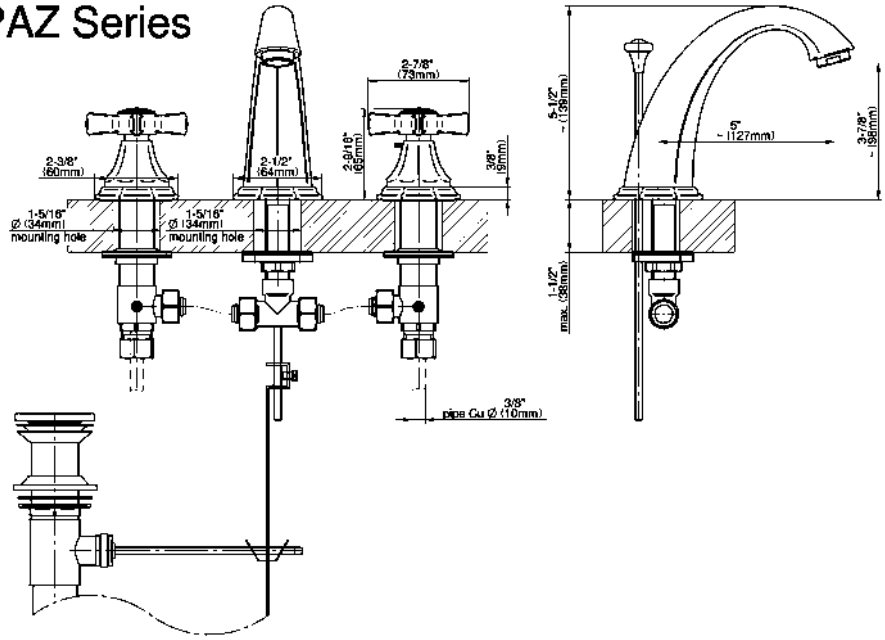
GN-1900-C16L
TOPAZ Series