RIVA Collection
G-18024VAP-T
RIVA Contemporary 4-button split knob vertical trim

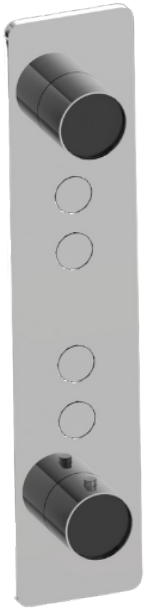

Available Finishes

Polished Chrome
Matte White
Polished Nickel
Polished Nickel PVD®
Steelnox® (Satin Nickel)
Brushed Nickel
Brushed Nickel PVD®
Polished Champagne PVD®
Brushed Champagne PVD®
Polished Gold PVD®
Brushed Gold PVD®
Polished Brass PVD®
Brushed Brass PVD®
24K Polished Gold
24K Brushed Gold
Satin Gold PVD®
Warm Bronze PVD®
Polished Rose Gold / Polished Copper PVD®
Brushed Rose Gold / Brushed Copper PVD®
Polished Tuscan Bronze PVD®
Brushed Tuscan Bronze PVD®
Vintage Brushed Brass
Olive Bronze
Gunmetal PVD®
Onyx PVD®
Brushed Onyx PVD®
Architectural Black™
Matte Black
Brushed Brass PVD® / Onyx PVD® Accents
Matte Black / Polished Brass PVD® Accents
Polished Tuscan Bronze PVD® / Brushed Gold PVD® Accents
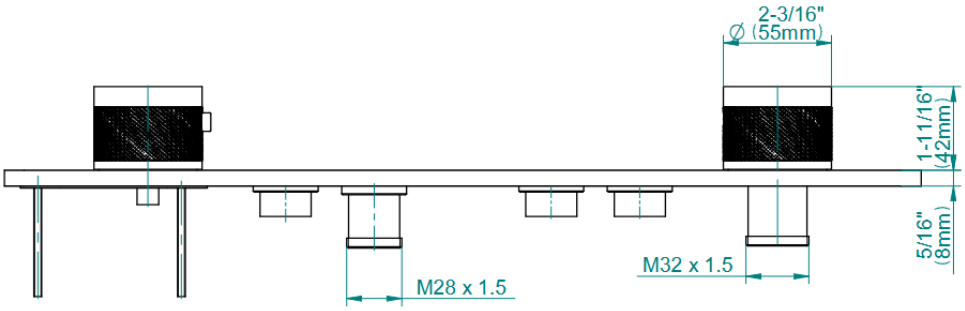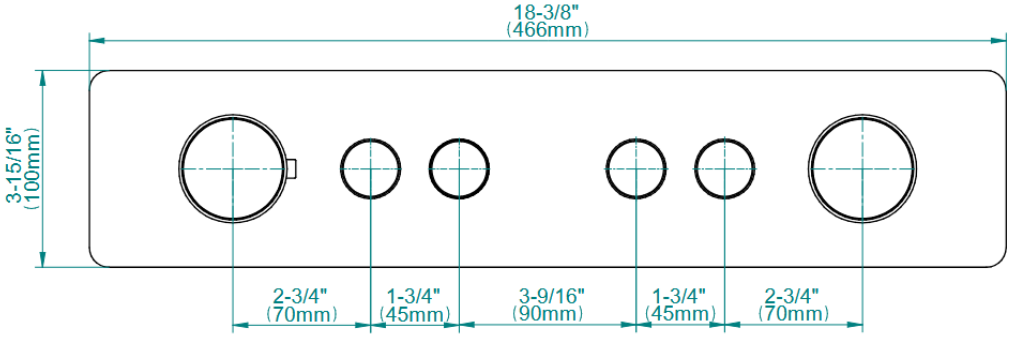
RIVA Collection
G-18024VAP-T
RIVA Contemporary 4-button split knob vertical trim