Harley Collection
G-11435-LM57B-T
Harley Wall-Mounted Lavatory Faucet with Single Handle (Trim)

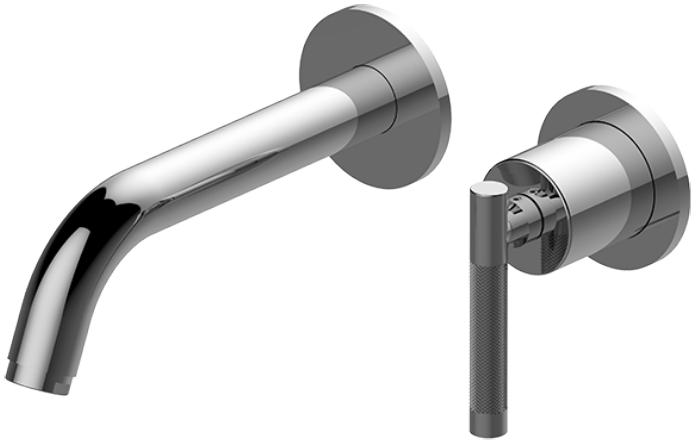

Product Features

- Wall-mount spout and handle installation
- Aerated flow rate ?1.2 max gpm
- 7-3/8" spout reach
- Handle may be installed on left or right of spout
- Drain assembly not included
- Optional matching decorative trap G-9970
- Optional extension kit
- To complete package, you must order Rough Valve

Code compliance

- ADA
- CALGreen

Available Finishes

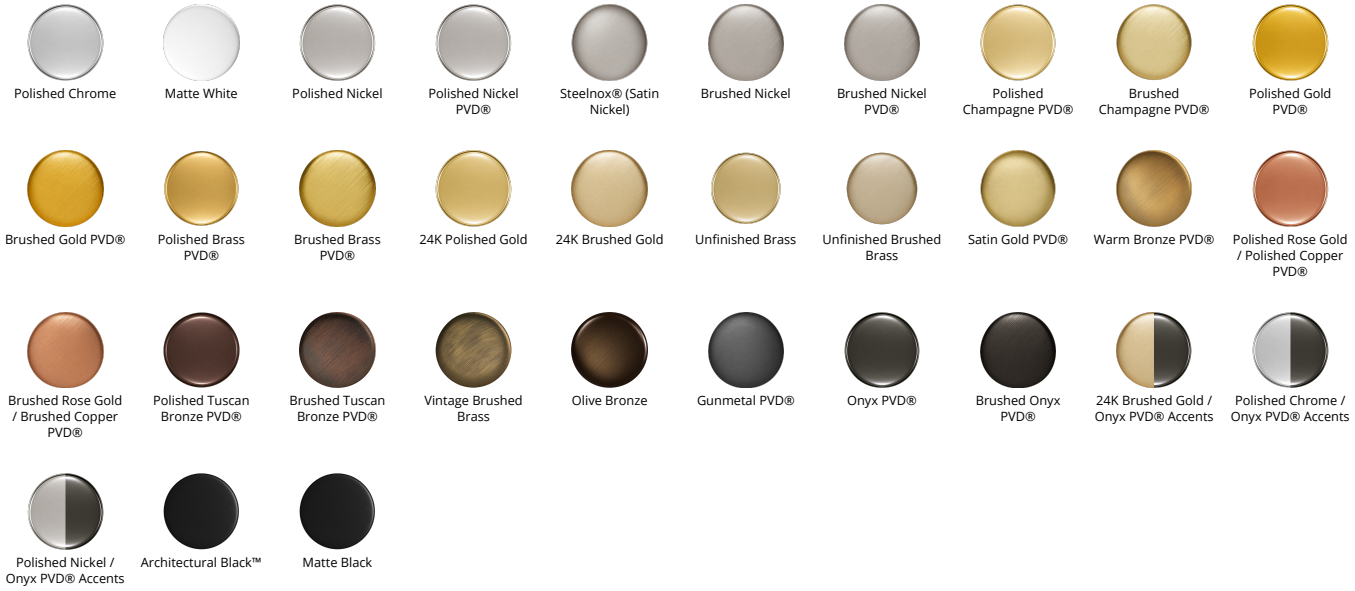
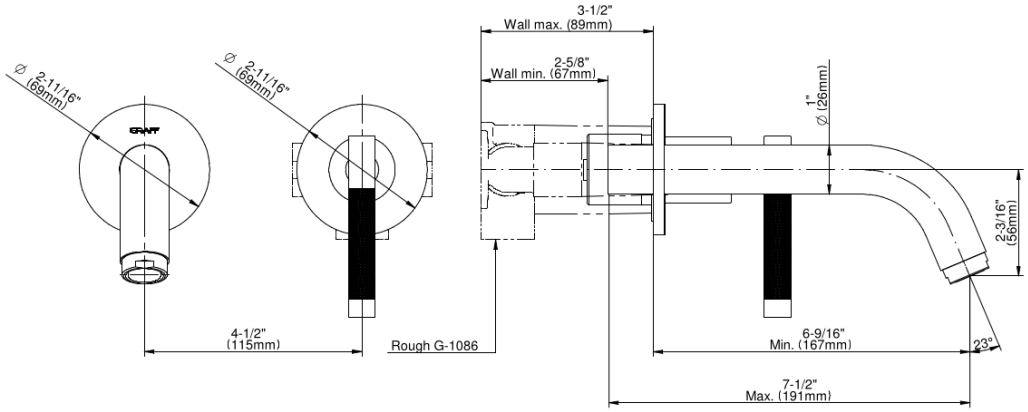
Harley Collection
G-11435-LM57B-T
Harley Wall-Mounted Lavatory Faucet with Single Handle (Trim)