Harley Collection
G-11422-LM57B
Harley Two-Hole Lavatory Faucet

Product Features

- Two-hole Installation
- Aerated flow rate ?1.2 max gpm
- 1-3/16" hole cutout (x2)
- Drain assembly not included
- Optional matching decorative trap G-9970

Code compliance

- ADA
- CALGreen

Available Finishes

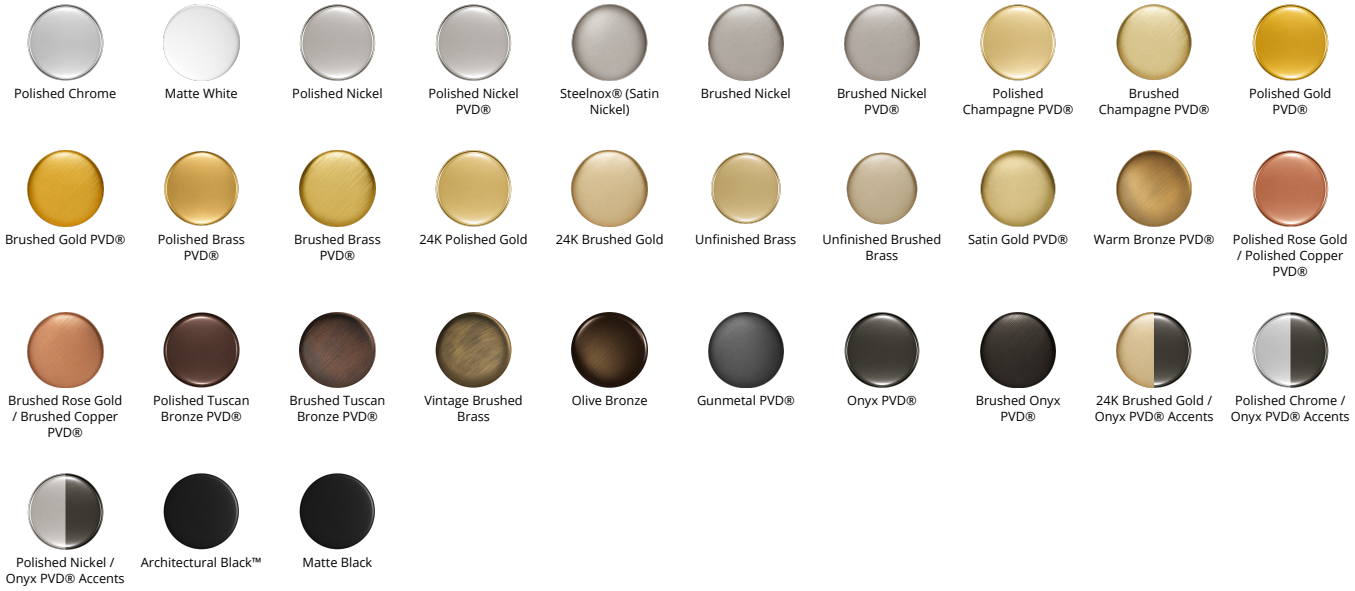
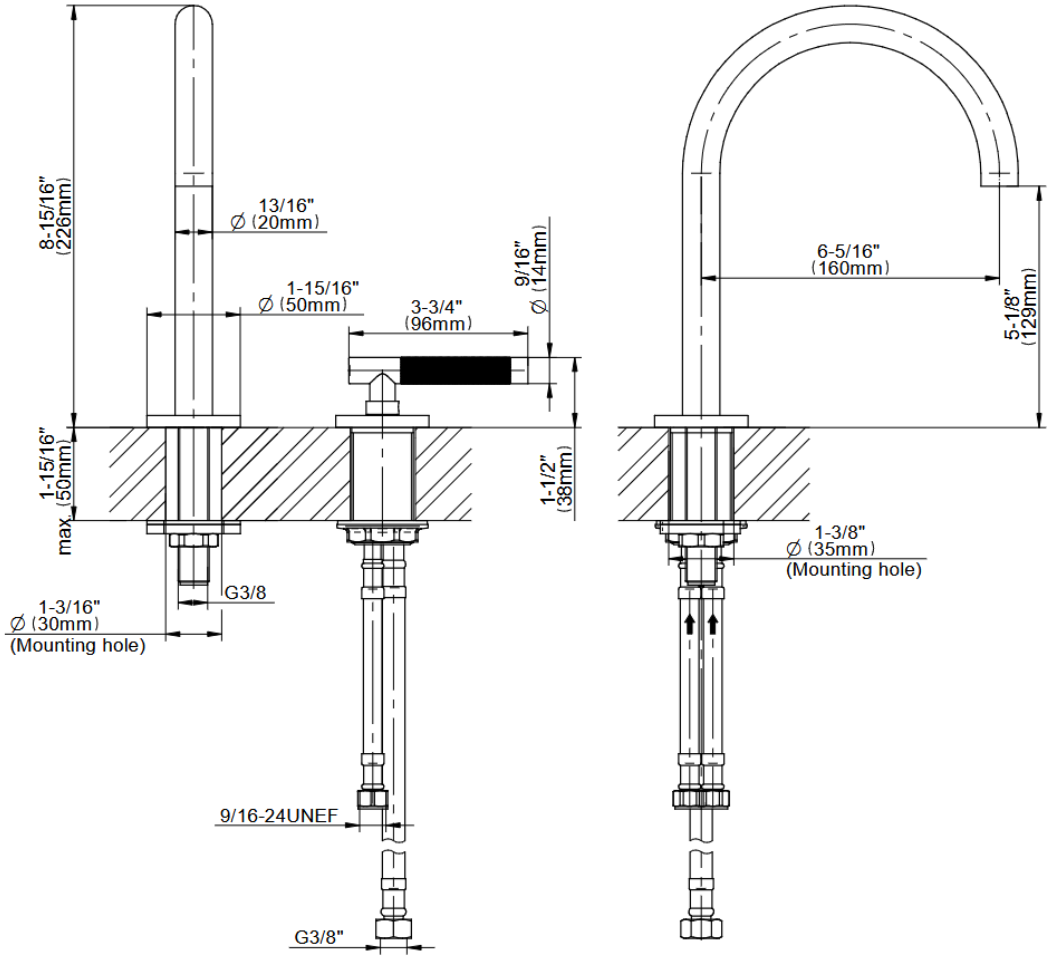
Harley Collection
G-11422-LM57B
Harley Two-Hole Lavatory Faucet