Harley Collection
G-11401-LM57L
Harley Lavatory Faucet

Product Features

- Single-hole installation
- Aerated flow rate ?1.2 max gpm
- 1-1/4" hole cutout
- Includes push-top umbrella pop-up drain with overflow
- Optional matching decorative trap G-9970

Code compliance

- ADA
- CALGreen

Available Finishes

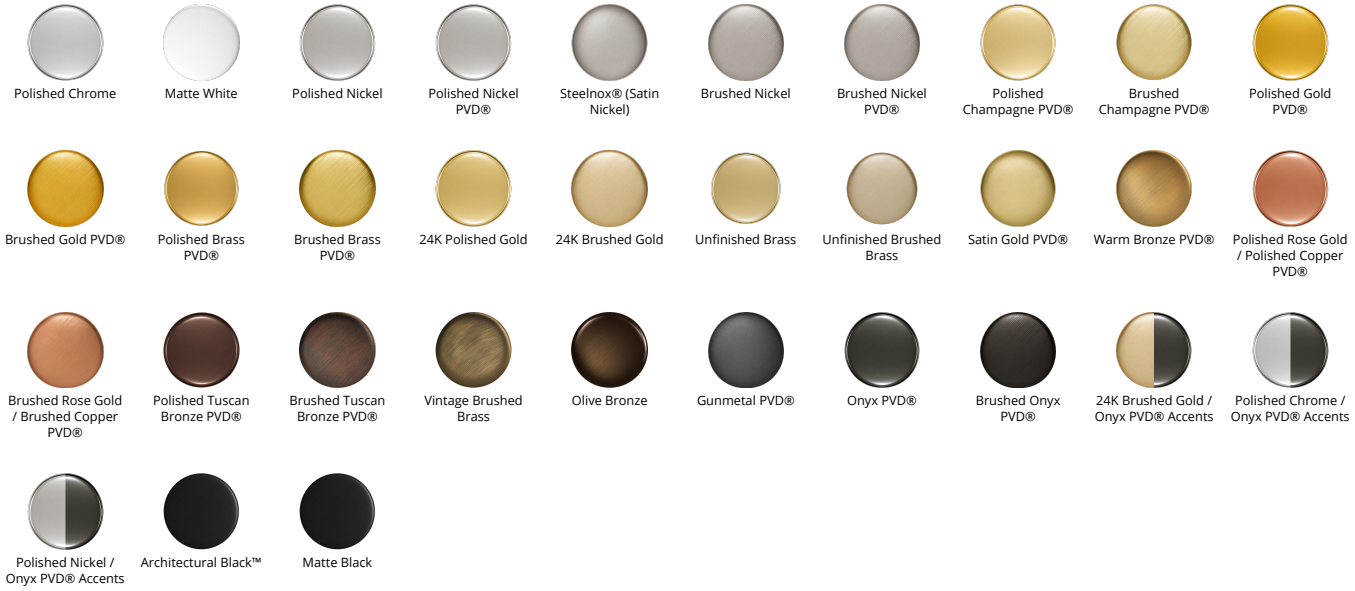

Harley Collection
G-11401-LM57L
Harley Lavatory Faucet

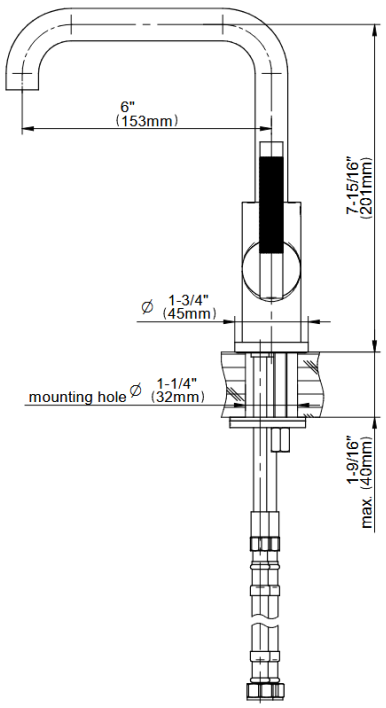

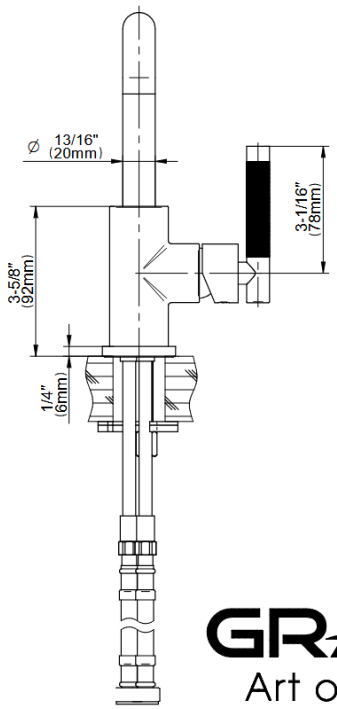

Art of Bath