Incanto Collection
G-11260-LM70
Incanto Bidet Faucet

Product Features

- Single hole installation
- Aerated flow rate ~ 2.2 gpm @60 psi
- Includes pop-up drain assembly with overflow

Code compliance

- ADA

Available Finishes
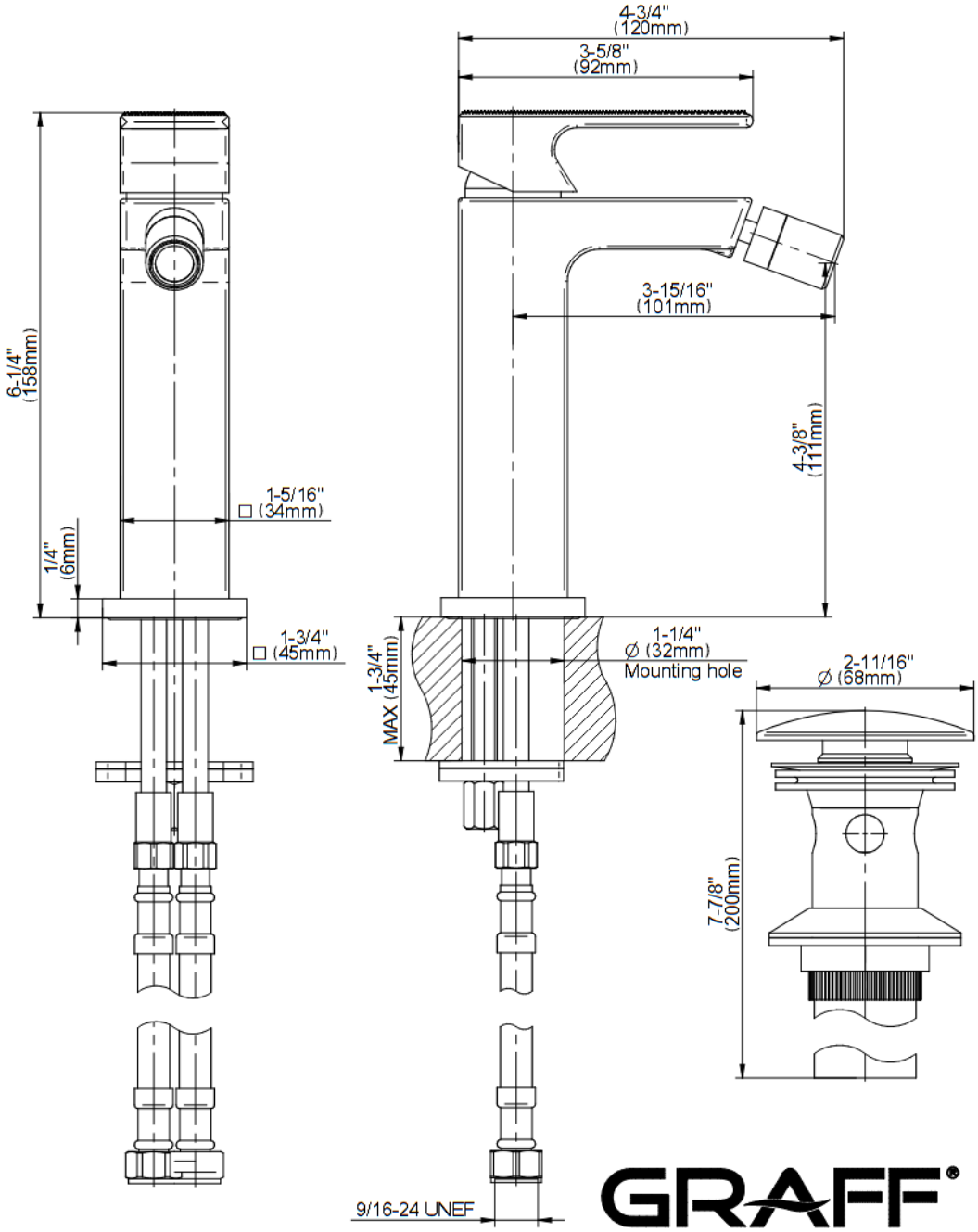
Incanto Collection
G-11260-LM70
Incanto Bidet Faucet